SOLATUBE 750 DS-C (21 IN / 530 MM) CURB CAP SUSPENDED CEILING WITH, & METAL TRANSITION BOX

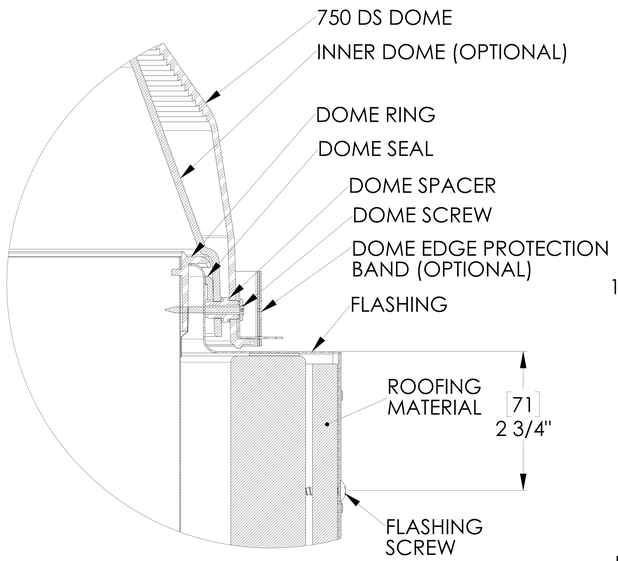

DETAIL A
SCALE 3 : 1

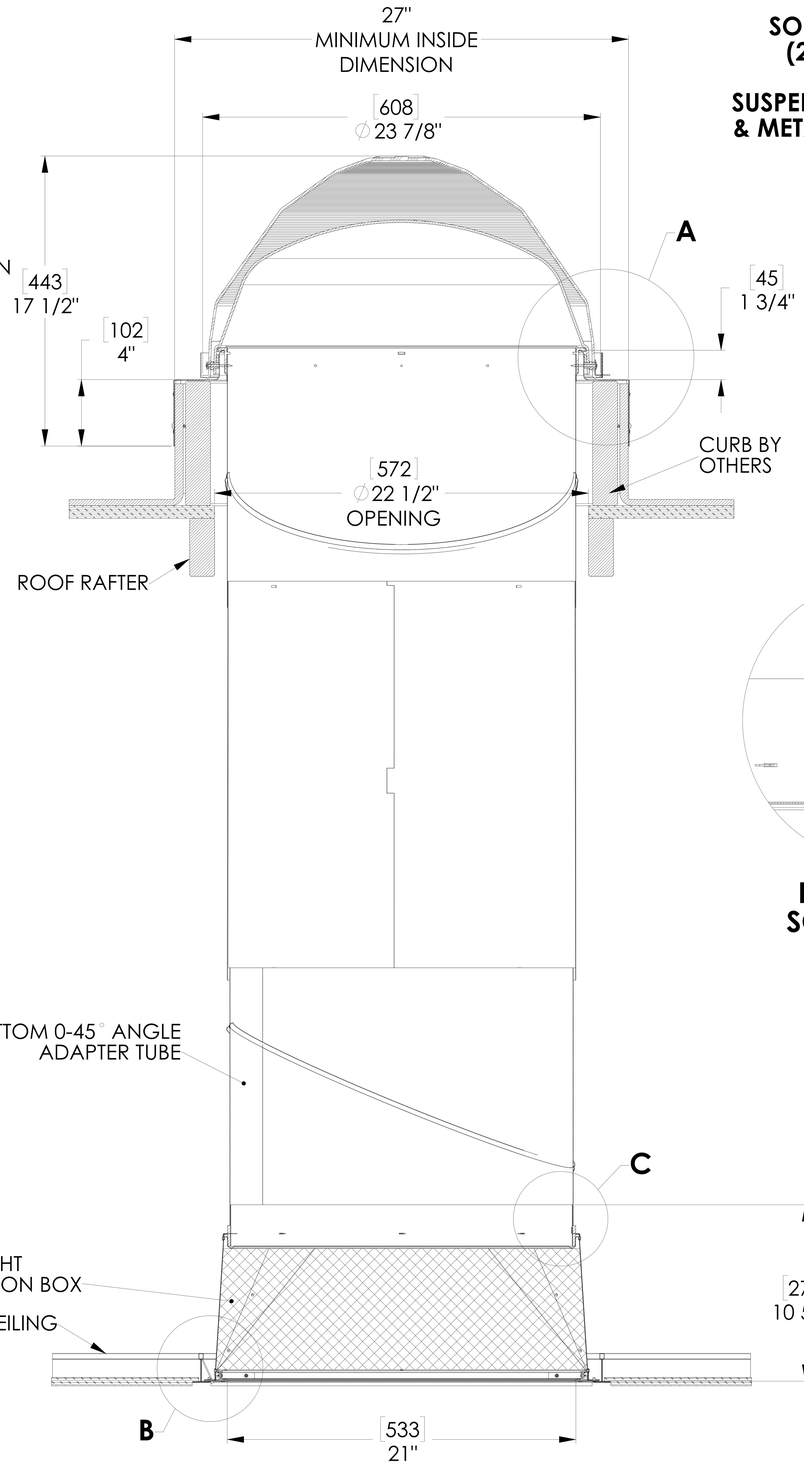

FULL SECTION
SCALE 1:1

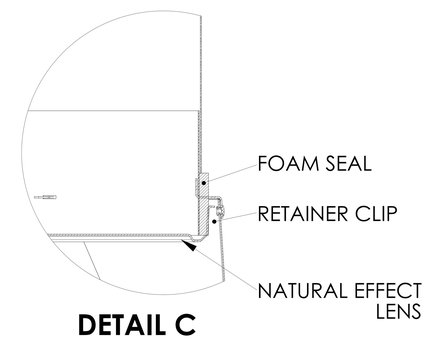

DETAIL C
SCALE 3 : 1

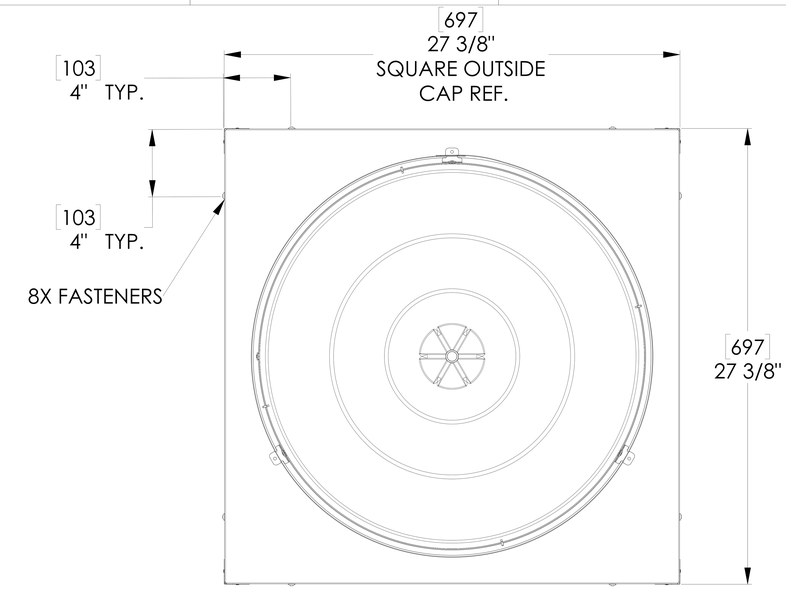

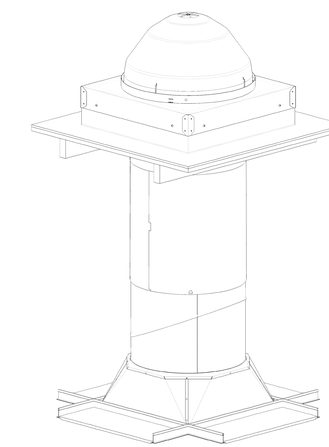

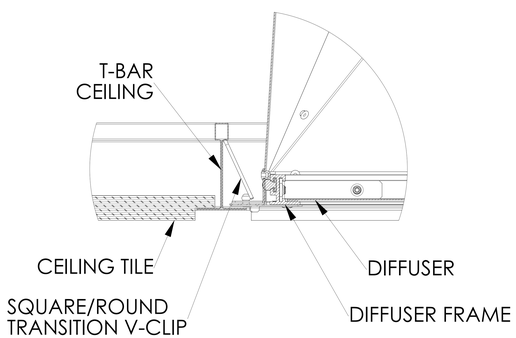

DETAIL B
SCALE 3 : 1

NOTES:

1. STRUCTURAL ELEMENTS (PLYWOOD, RAFTERS, DRYWALL ETC.) BY OTHERS & SHOWN FOR REFERENCE ONLY.
2. ALL TUBE JOINTS & SEAMS TAPED WITH 2" FOIL TAPE (NOT SHOWN).
3. DIMENSIONS IN BRACKETS ARE METRIC UNLESS OTHERWISE SPECIFIED.
4. 6" MIN CLEARANCE SHOULD BE MAINTAINED FROM ALL SOLATUBE COMPONENTS AND OTHER PLENUM COMPONENTS.
5. 30" MIN. HEIGHT NEEDED FOR TRANSITION BOX.
6. ONE (1) SOFTLIGHT EXTENSION TUBE PER DAYLIGHTING SYSTEM. MUST INSTALL AS FINAL EXTENSION TUBE PRIOR TO THE BOTTOM (ANGLE) TUBE.

UNLESS OTHERWISE SPECIFIED: DIMENSION TOLERANCE FRACTIONS ± 1/4" INCH: .X ± .1, .XX ± .06 MILLIMETER: [.X] ± 2.5, [.XX] ± 1.5	SOLATUBE INTERNATIONAL, INC. COPYRIGHT 2013 WWW.SOLATUBE.COM	SOLATUBE® 2210 OAK RIDGE WAY VISTA, CALIFORNIA 92081-8341 PH (760) 597-4400
MATERIAL -- --	DRAWN BY: STEVENS DATE: 3/21/19	TITLE: 750 DS-C CURB CAP SUSPENDED CEILING S750DS-C-DAI-FC-AK-TM
FINISH --	CHECKED BY: -- DATE: --	SIZE: D DWG. NO. REV: 1
DO NOT SCALE DRAWING	APPROVED BY: -- DATE: --	SCALE: 1:1 SHEET 1 OF 1